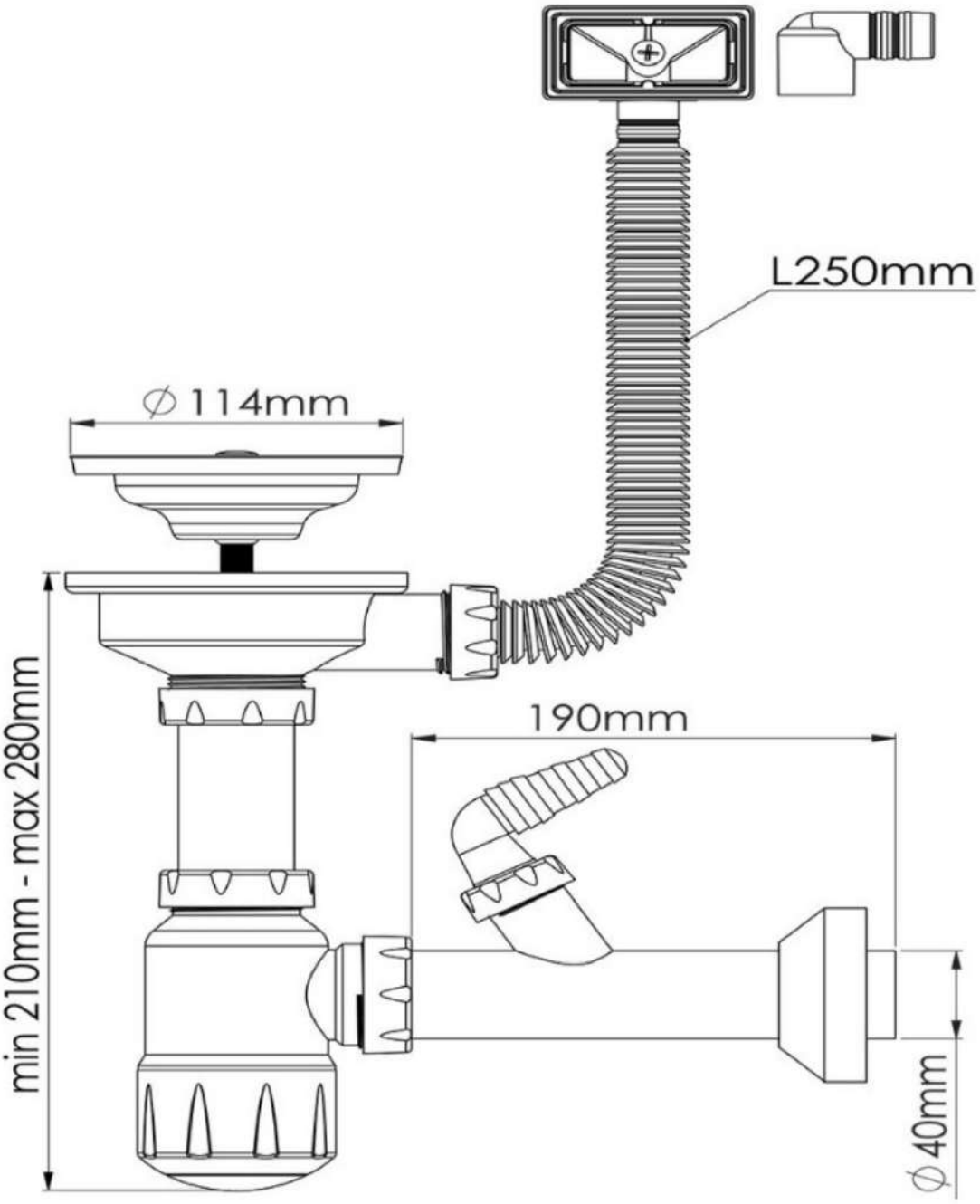
L250mm
∅114mm
min 210mm - max 280mm
190mm
∅40mm