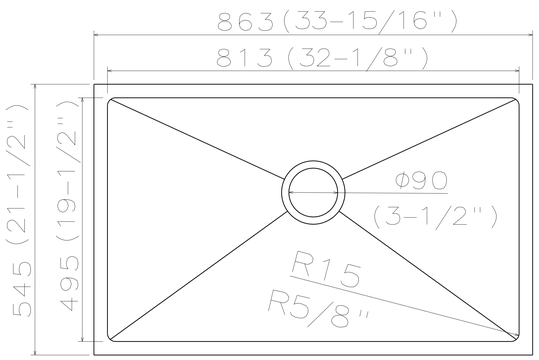
863 (33-15/16")
813 (32-1/8")
545 (21-1/2")
495 (19-1/2")
Φ90
(3-1/2")
R15
R5/8"